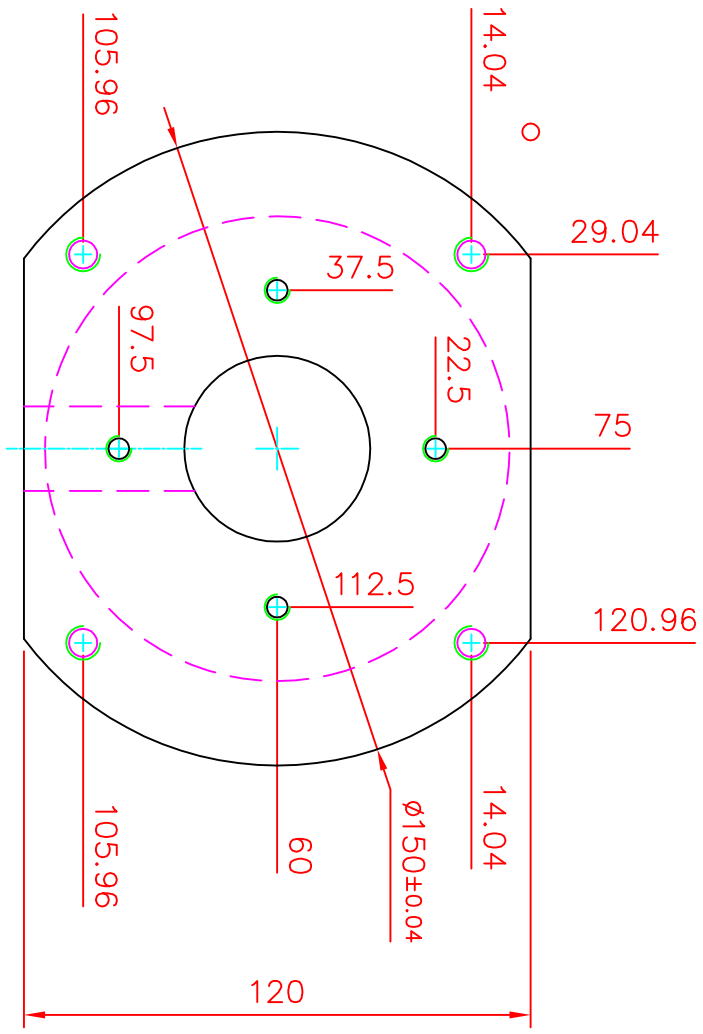
105.96
14.04
0
29.04
37.5
97.5
22.5
75
112.5
120.96
105.96
60
ø150±0.04
14.04
120

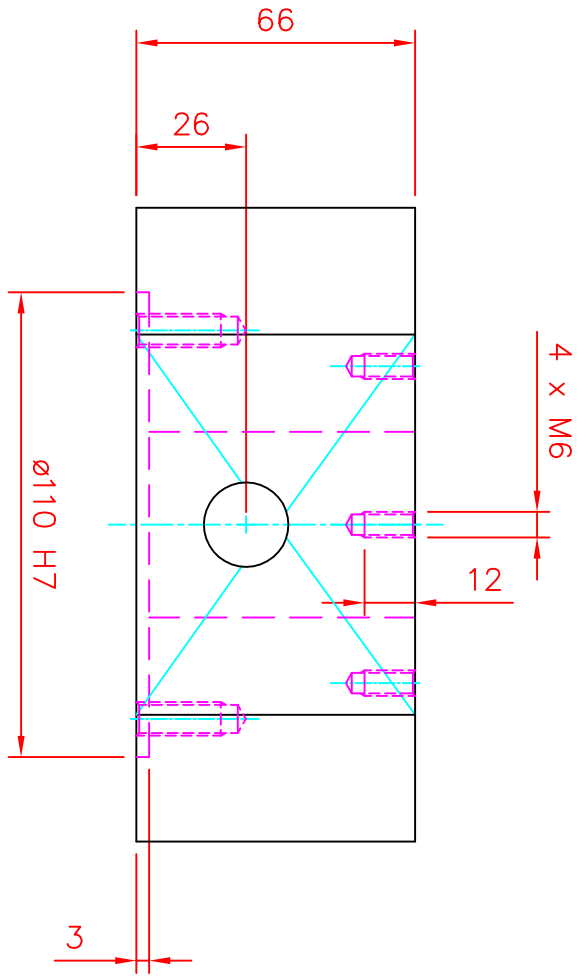
66
26
ø110 H7
4 x M6
12
3

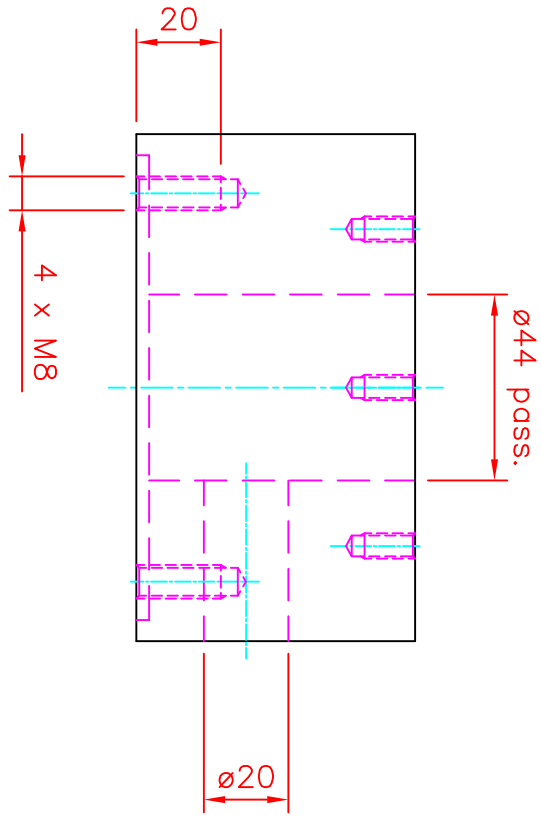
20
4 x M8
ø44 pass.
ø20