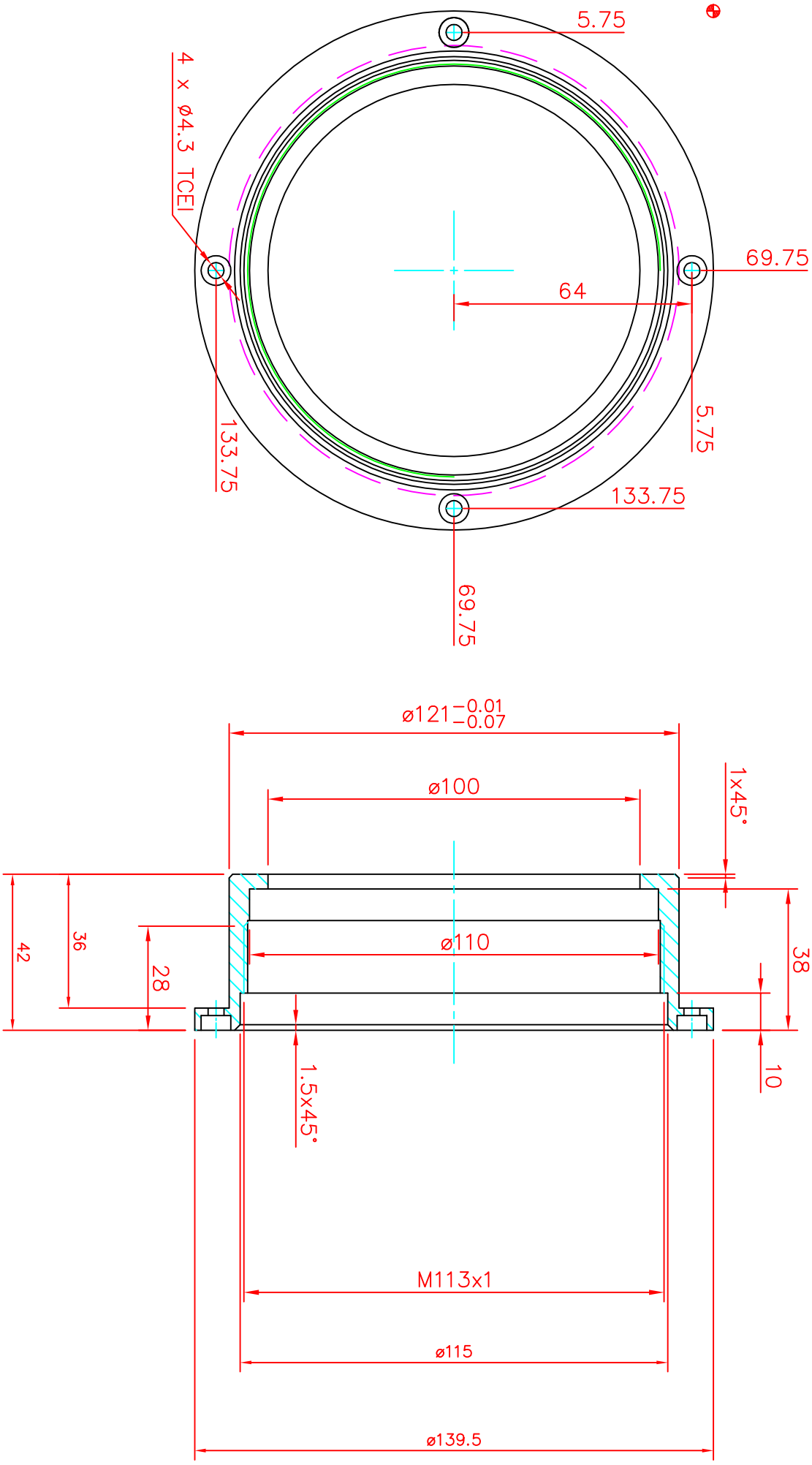
5.75
4 x ø4.3 TCEI
69.75
64
133.75
5.75
133.75
69.75
ø121 −0.01 −0.07
ø100
1x45°
42
36
28
ø110
38
10
1.5x45°
M113x1
ø115
ø139.5